KALFIRE
FIREPLACES

W70-33F

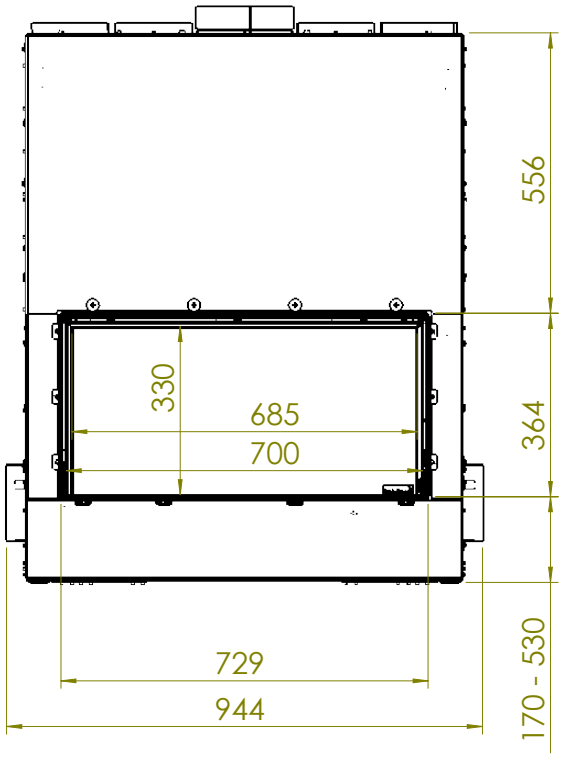

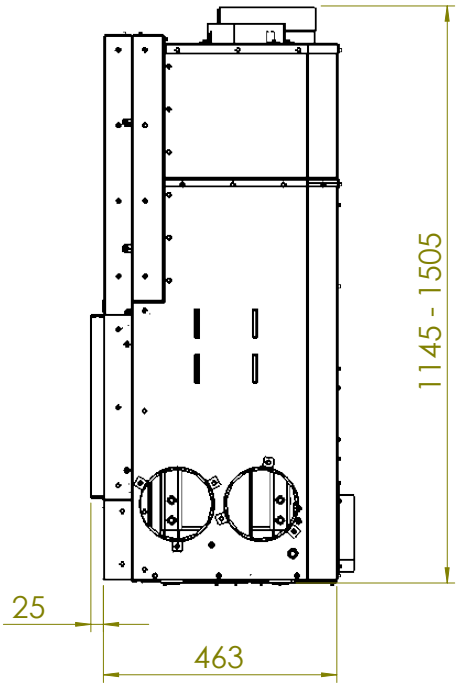

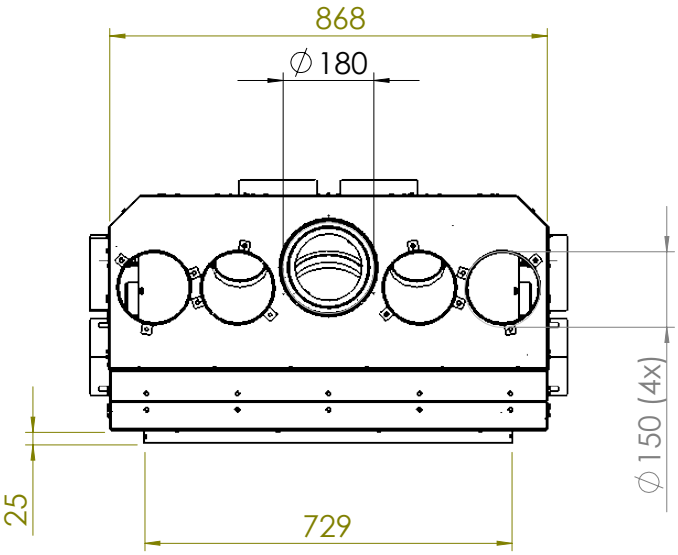

All dimensions in mm. Modifications under reserve.

8-9-2020 sheet 1 / 5

© All rights reserved. This drawing is sole property of Kal-fire. No part of this drawing may be reproduced, or published, in any form or in any way without prior written permission from Kal-fire.

KALFIRE
FIREPLACES

W70-33F

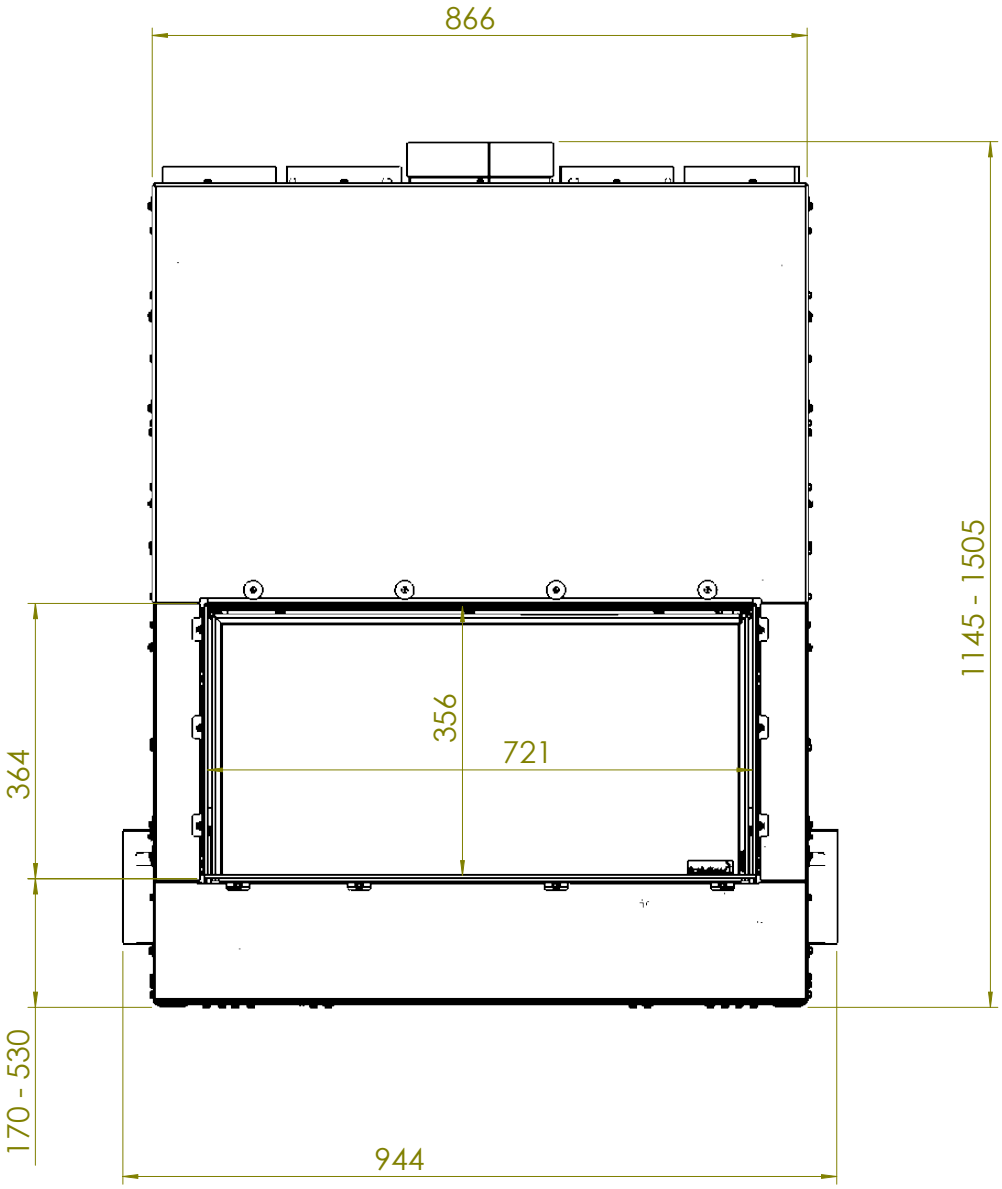

All dimensions in mm. Modifications under reserve.

8-9-2020 sheet 2 / 5

© All rights reserved. This drawing is sole property of Kal-fire. No part of this drawing may be reproduced, or published, in any form or in any way without prior written permission from Kal-fire.

KALFIRE
FIREPLACES

W70-33F

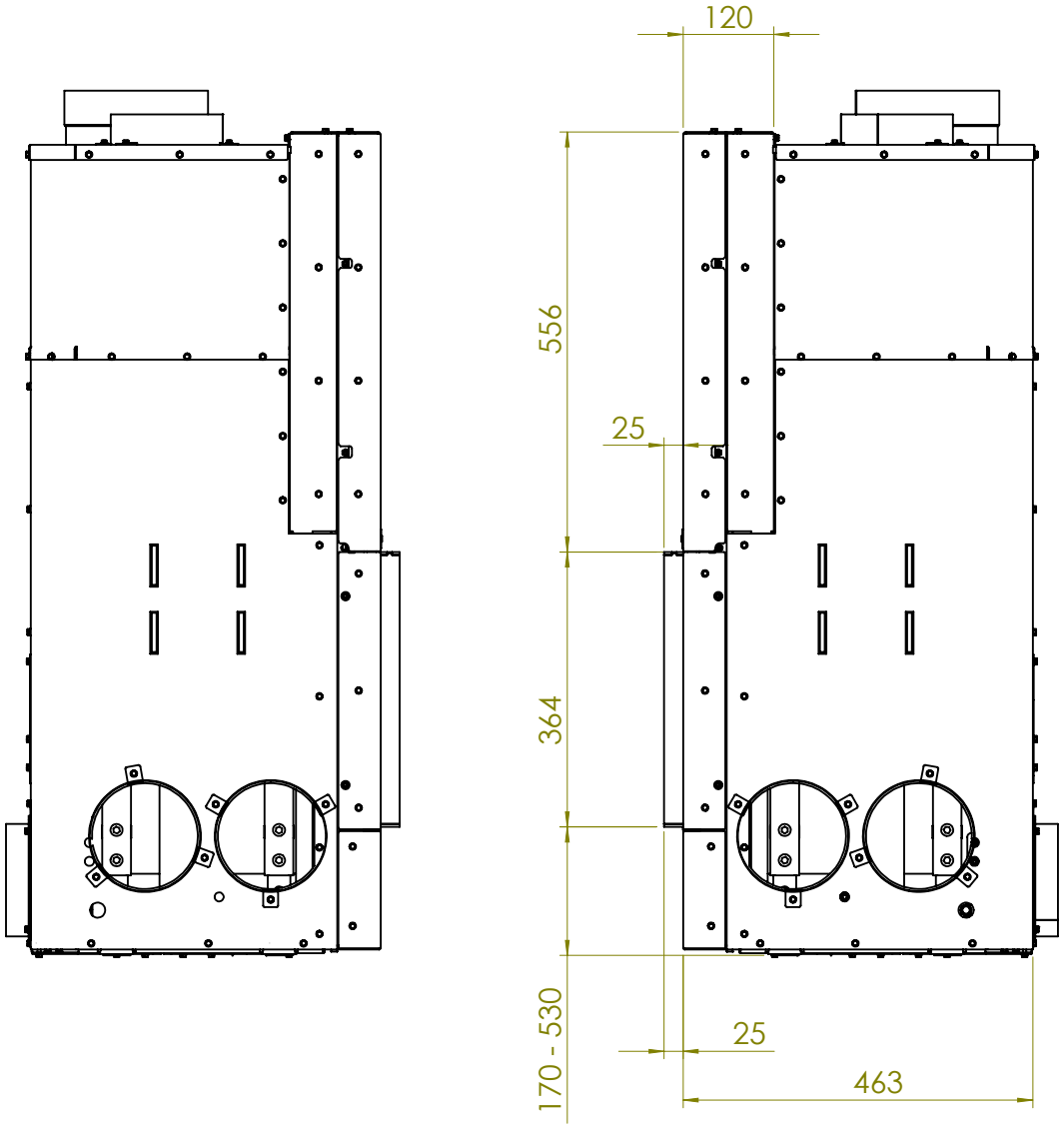

All dimensions in mm. Modifications under reserve.

8-9-2020 sheet 3 / 5

© All rights reserved. This drawing is sole property of Kal-fire. No part of this drawing may be reproduced, or published, in any form or in any way without prior written permission from Kal-fire.

KALFIRE
FIREPLACES

W70-33F

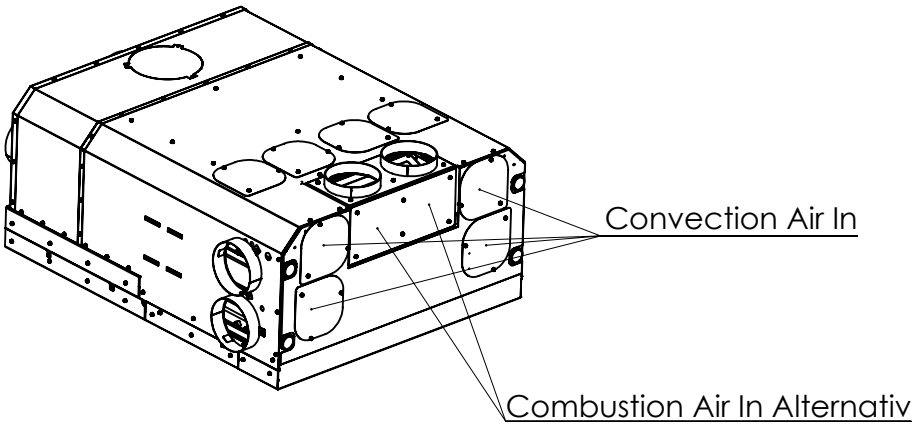

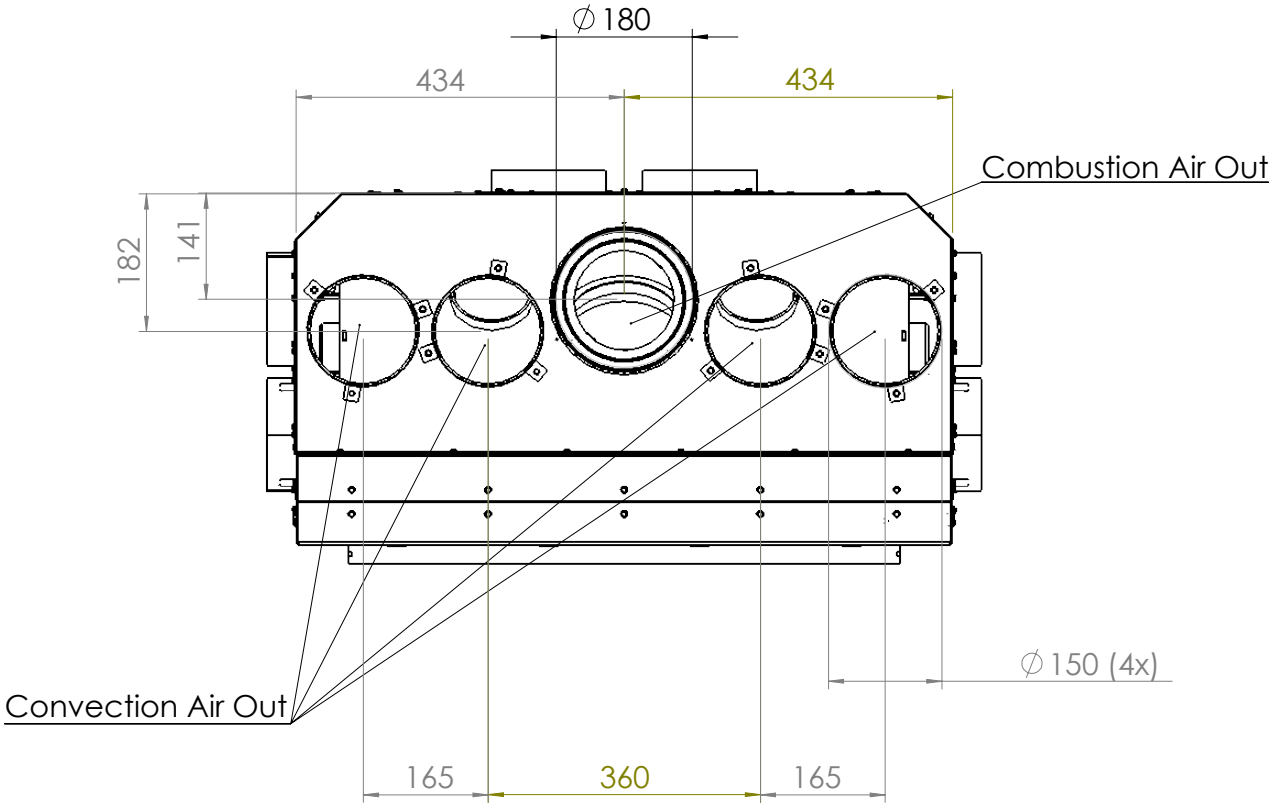

All dimensions in mm. Modifications under reserve.

8-9-2020 sheet 4 / 5

© All rights reserved. This drawing is sole property of Kal-fire. No part of this drawing may be reproduced, or published, in any form or in any way without prior written permission from Kal-fire.

KALFIRE
FIREPLACES

W70-33F

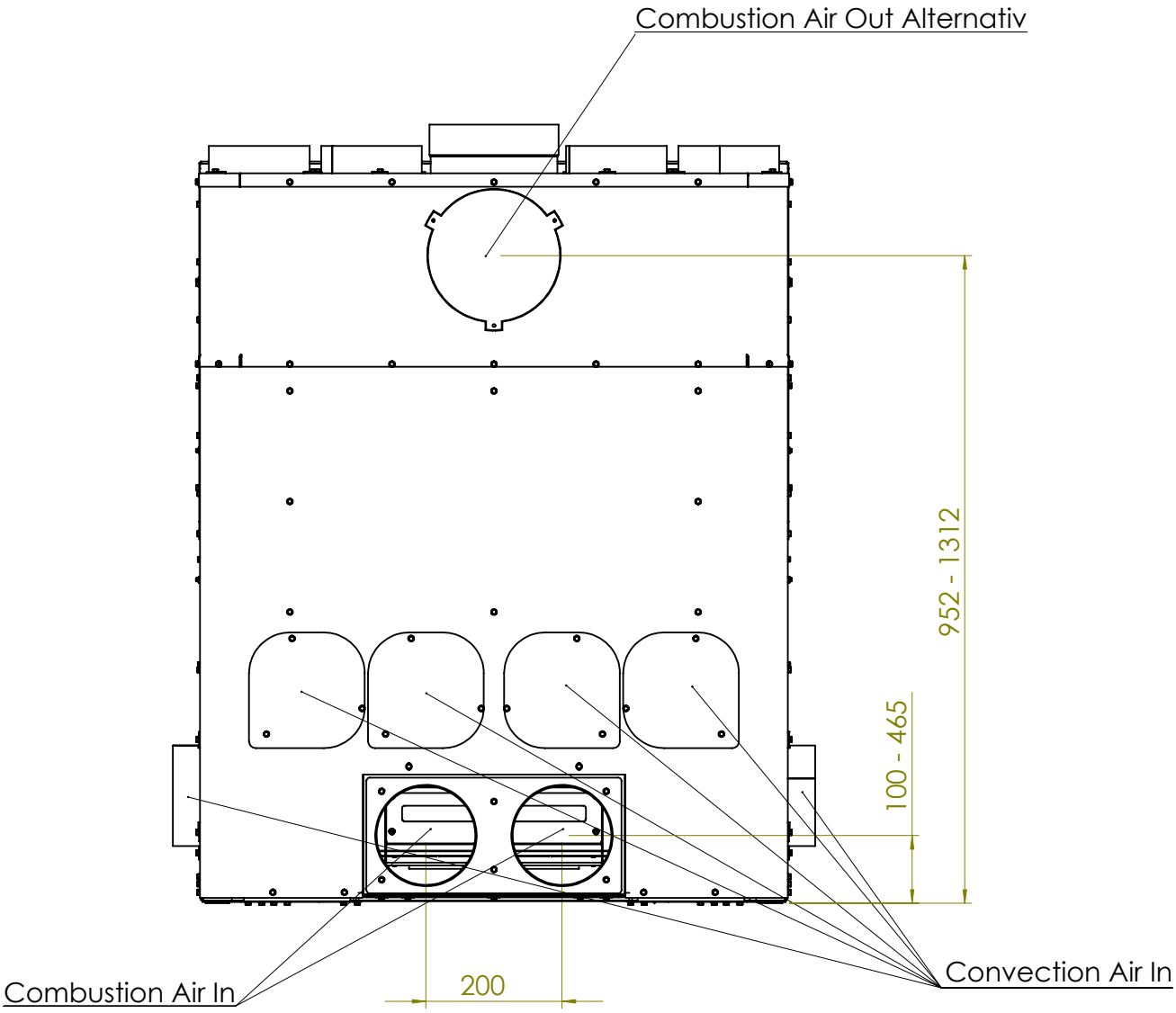

All dimensions in mm. Modifications under reserve.

8-9-2020 sheet 5 / 5

© All rights reserved. This drawing is sole property of Kal-fire. No part of this drawing may be reproduced, or published, in any form or in any way without prior written permission from Kal-fire.